Project: _____ Date: _____ Approval: _____ Qty: ____ Item #: 60S3242424LX

REGENCY
Tables and Sinks

# Regency S3C242414-24LFT 102 1/2" 16-Gauge Stainless Steel Three Compartment Commercial Sink with Cross Bracing and 1 Drainboard - 24" x 24" x 14" Bolws - Left Drainboard

#60S3242424LX

## Technical Data

| | |
|---|---|
| **Length** | 102 1/2 Inches |
| **Width** | 29 1/2 Inches |
| **Height** | 43 3/4 Inches |
| **Drainboard Length** | 24 Inches |
| **Bowl Depth** | 14 Inches |
| **Backsplash Height** | 7 1/4 Inches |
| **Work Surface Height** | 36 1/2 Inches |
| **Basket Drain Size** | 3 1/2 Inches |
| **Bowl Front to Back** | 24 Inches |
| **Bowl Left to Right** | 24 Inches |

## Features

- Made of high-quality 16-gauge type 304 stainless steel
- Designed with (3) 14" deep bowls and rounded corners for easy cleaning
- Stainless steel legs, bullet feet, sockets, and crossbracing for maximum strength and longevity
- Includes 1 1/2" IPS drain connection and 3 1/2" basket strainers
- Backsplash and rolled edges prevent splashes and overflow

## Certifications

**NSF Certified**

© 2026 Regency Tables & Sinks

## Technical Data

| | |
|---|---|
| **Drain Outlet Size** | 1 1/2 Inches |
| **Faucet Centers** | 8 Inches |
| **Features** | NSF Certified |
| **Gauge** | 16 Gauge |
| **Leg Construction** | Stainless Steel |
| **Material** | Stainless Steel |
| **Number of Compartments** | 3 Compartments |
| **Number of Drainboards** | 1 Drainboard |
| **Stainless Steel Type** | Type 304 |
| **Style** | 1 Drainboard |
| **Type** | Straight / Line Sinks |

## Plan View

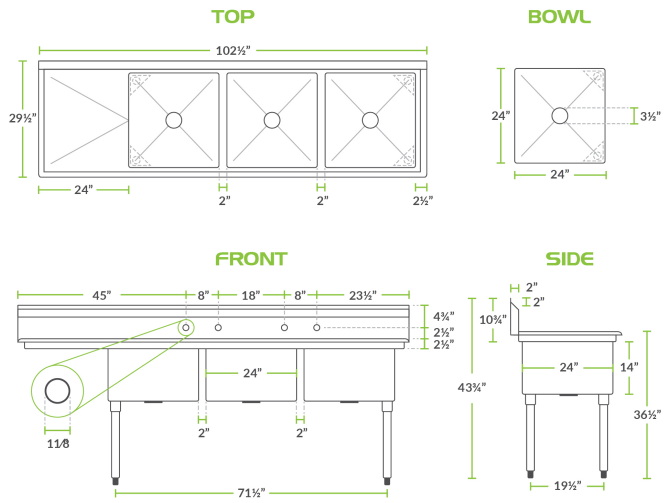


## Notes & Details

Ideal for setting up a washing, rinsing, and sanitizing station, this Regency 102 1/2" 3 compartment sink with drainboard is a great addition to your busy commercial kitchen. It's constructed from high-quality, 16-gauge type 304 stainless steel, making it more corrosion-resistant and durable than other sinks made from thinner, 18-gauge material. This sink features a sturdy, 24" drainboard so you can easily wash and dry dishes and utensils in one convenient location. It's also dipped a minimum of 1/4" to facilitate better drainage. Welded construction contributes to the long-lasting use and overall strength of this sink / drainboard combo.

The 14" deep bowls are die-stamped to a minimum of 1/4" to ensure proper drainage. Plus, it includes 3 1/2" basket strainers to catch food debris, which prevents the drain from clogging. For easy cleaning, the compartment has rounded corners so you can rinse and wipe down the sink.

A 10" tall backsplash is included and comes complete with (4) 1 1/8" diameter holes punched on 8" centers to accommodate 2 faucets (sold separately). This sink also includes a 1 1/2" raised rolled edge, which is 2" tall on the front and both sides to contain splashes and overflow. The legs are constructed of 1 5/8" diameter stainless with stainless steel cross-bracing and adjustable plastic feet for added stability. These features serve to prolong the life of your sink while adding exceptional strength to the unit.

© 2026 Regency Tables & Sinks

⚠ **WARNING:** This product can expose you to chemicals including lead, which are known to the State of California to cause cancer and birth defects or other reproductive harm. For more information, go to www.p65warnings.ca.gov.

© 2026 Regency Tables & Sinks